DI NICOLA®

MANUFACTURING - WATER VALVES - INDUSTRIAL VALVES - PENSTOCKS AND GATES - RADIAL GATES - SPECIAL APPLICATIONS

NEEDLE VALVES

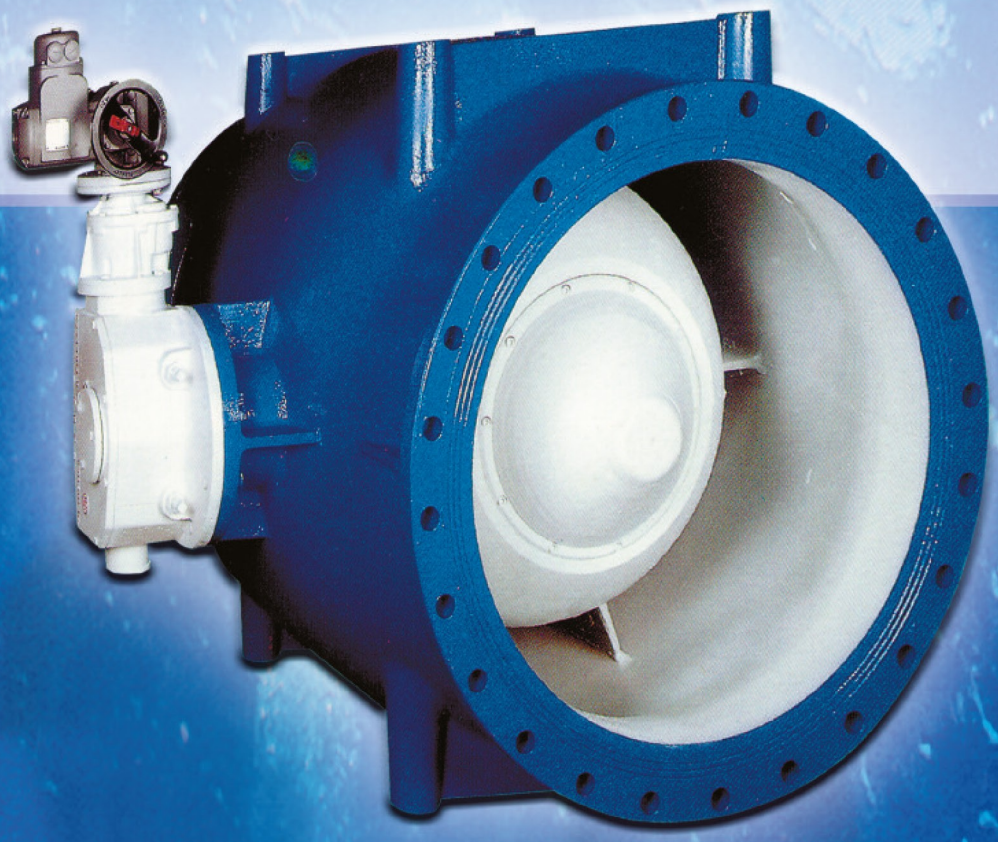

TÜVRheinland® CERTIFIED

Management System
ISO 9001:2008

www.tuv.com
ID9105084789

GENERAL CHARACTERISTICS

The network has gained increasing importance trying to conciliate available water reserves and the always increasing request for water. Usually, the network capacity is always greater than the effective request; this implies the necessity to utilize devices able to control the distribution of the water without wasting it. Needle valve is especially designed to realize the function of regulating the water flow, maintaining an easy handling even in circumstances which comport heavy hydrostatic loads at its mouth and a very different excercise pressure. The use of needle valve with the aid of actuators allows to utilize it in control systems with very different functions. Water flow regulation actuated by needle valve is done by the horizontal sliding of an obturator, mechanically acted by an handle with a connecting rod-movement. Thanks to a special balanced chamber every kind of vibration or anomalous

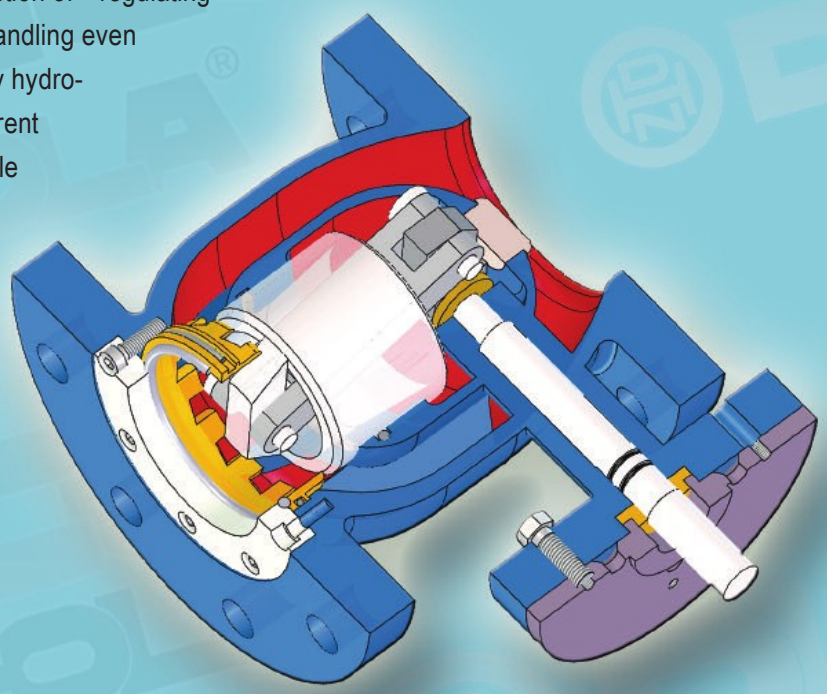

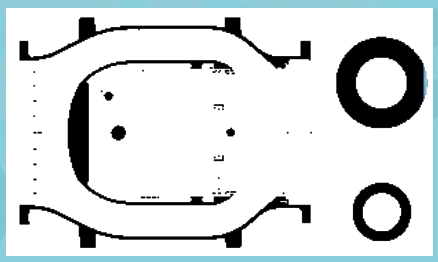

oleodynamic load are elimin ated, moreover its internal shape is especially made to avoid the incurring of cavitation. The obturator moves in position to close the valve following the direction of the flow and allowing to control the change of the water flow without efforts.

CAVITATION CAUSES AND EFFECTS

Either we regulate or stop a water flow in the concentration area, a reduction of the pressure occurs. When the pressure drops below the vapour saturation in the water, gases are generated with subsequent release of vapourbubbl es in the zone of depression. In this environment the bubbles, pushed by the flow, caused by the pressure difference downstream, implode reverting back to liquid form and damaging the inner walls of the piping. The shocks due to the high pressure localized on the walls of the valves and the pipes cause great damages. to them added to the heavy noise and destructive vibrations. The special profile of the DI NICOLA valve, drives the water flow against the walls of the body of the v alve and of the nearby conduit creating, in its interior, a collapse area for the vapour bubbles that prevents them to reach the walls of the valve or of the conduit creating, in its interior, a collapse area for the vapour bubbles that prevents them to reach the walls of the valve or of the conduit and to damage them.

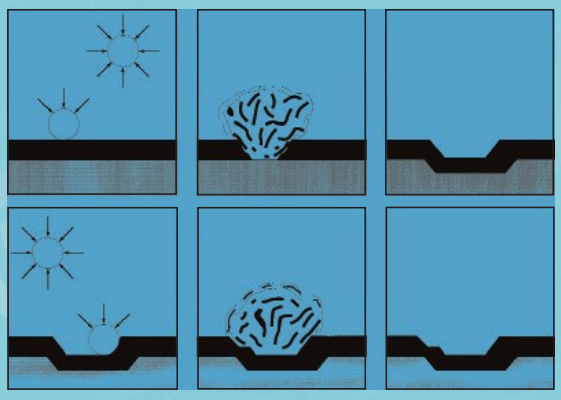

MATERIALS AND DIMENSIONS

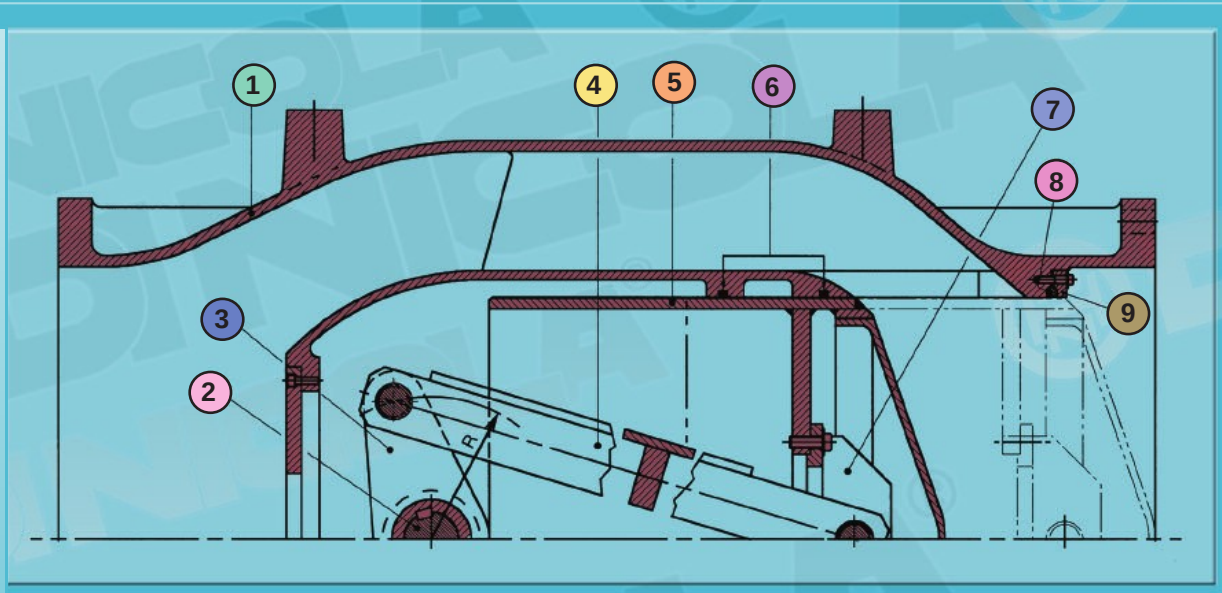

1) Body: spheroidal cast iron GGG50 - Fe S275JR

2) Stem: stainless steel AISI 420 - AISI 316

3) Crank: spheroidal cast iron GGG50 - Fe S275JR

4) Connecting rod: stainless steel AISI 304 - Fe S275JR

5) Shutter: stainless steel AISI 304 - AISI 316

6) O-ring: neoprene

7) Support: stainless steel AISI 304 - Fe S275JR

8) Sealing rubber: neoprene

9) Collar: stainless steel AISI 304 - Fe S275JR

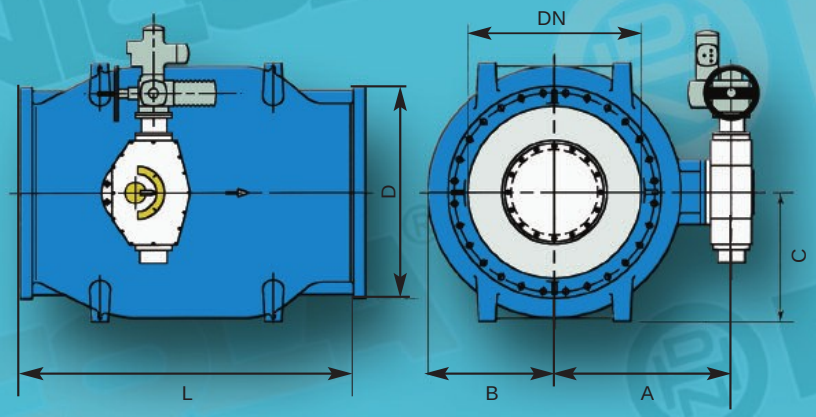

DIMENSIONS IN MM

DN	A	B	C	D (PN 10)	D (PN16)	D (PN 25)	D (PN 40)	L
100	150	110	110	220	220	235	235	200
125	180	125	125	250	250	270	270	250
150	210	143	143	285	285	300	300	300
200	240	170	170	340	340	360	375	400
250	290	203	220	395	405	425	450	500
300	330	236	255	445	460	485	515	600
350	380	280	285	505	520	555	580	700
400	420	324	330	565	580	620	660	800
450	430	330	340	615	640	670	685	900
500	455	372	388	670	715	660	755	1000
600	546	443	465	780	840	845	890	1200
700	637	512	525	895	910	960	995	1400
800	715	582	592	1015	1025	1085	1140	1600
900	780	685	655	1115	1125	1185	1250	1800
1000	870	730	750	1230	1255	1210	1360	2000

Larger diameters are also available on request on electrowelded steel .

DOCUMENTATION

Report made on the bases of the "Di Nicola" valve testing, realized by "Istituto di Idraulica Agraria - Università di Napoli" (1991).

Thecnical report on hydraulic behaviour

Aim:

The following report is to illustrate the technical reasons by which the valve is not subject to cavitation phenomena when used in a correct way.

Pressure course within the valve (fig. 1)

Piezometric pressure in the hydraulic network follows the direction indicated on fig. n° 1

Section A = Upstream pressure (Hm)
Section C = Minimum pressure within the valve
Section D = Downstream pressure (Hv)

The difference (Hm-Hv) = ΔH represents the effective head loss.
The value of the head loss is defined at each step by the following formula

$$\Delta H = K_n \frac{V^2}{2g}$$

Kn = *Head loss coefficient at the opening degree*

The apparent head loss (δH) is instead recovered by downstream conduit after few diameters (D section), so it is not taken in account in the head losses, anyway it is very important to define the value of the pressure within the valve.

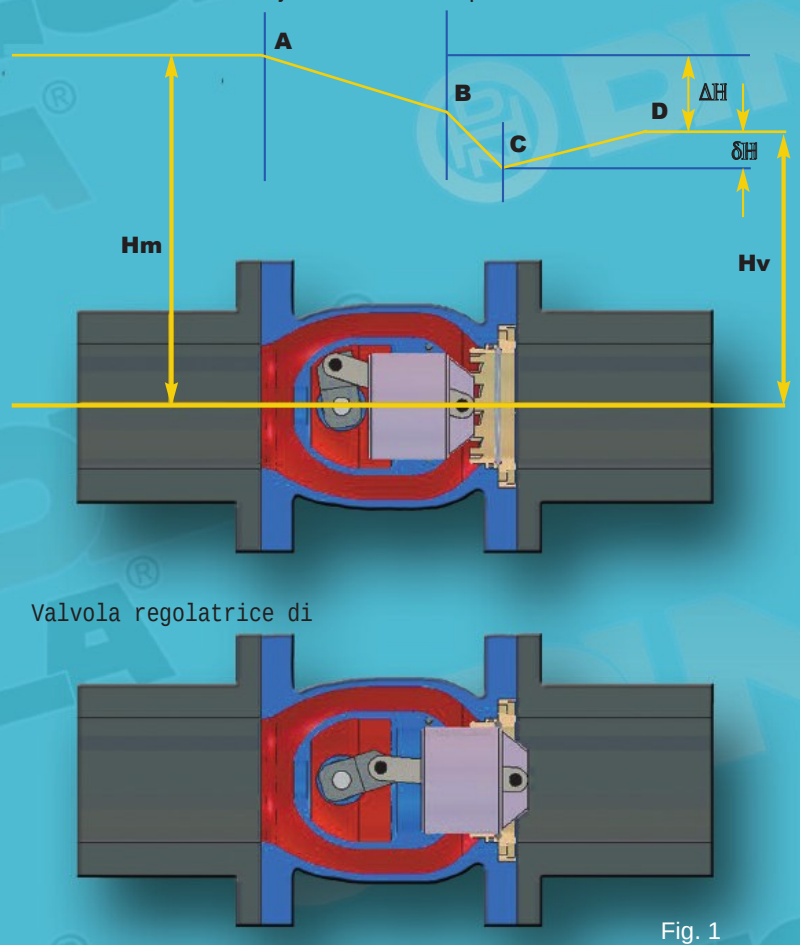

Fig. 1

Calculation of the minimum pressure value in section "C" - (fig. 2)

During the tests on the sample have been studied the minimum values of the pressure on the section C.
Medium values of ΔH and δH at different opening degrees have been scheduled to obtain diagram (fig. 2)
To evaluate the minimum value of the pressure on section C, is necessary to observe the piezometric curve at the different opening degrees.

The C pressure is valid at every opening degree.

$$P_c = Hv - \delta H$$

If the "C" pressure is > than atmospheric pressure, cavitation does not occur.
If the "C" pressure is < than atmospheric pressure, it is necessary to analyze the situation to provide the system with devices able to prevent cavitation.

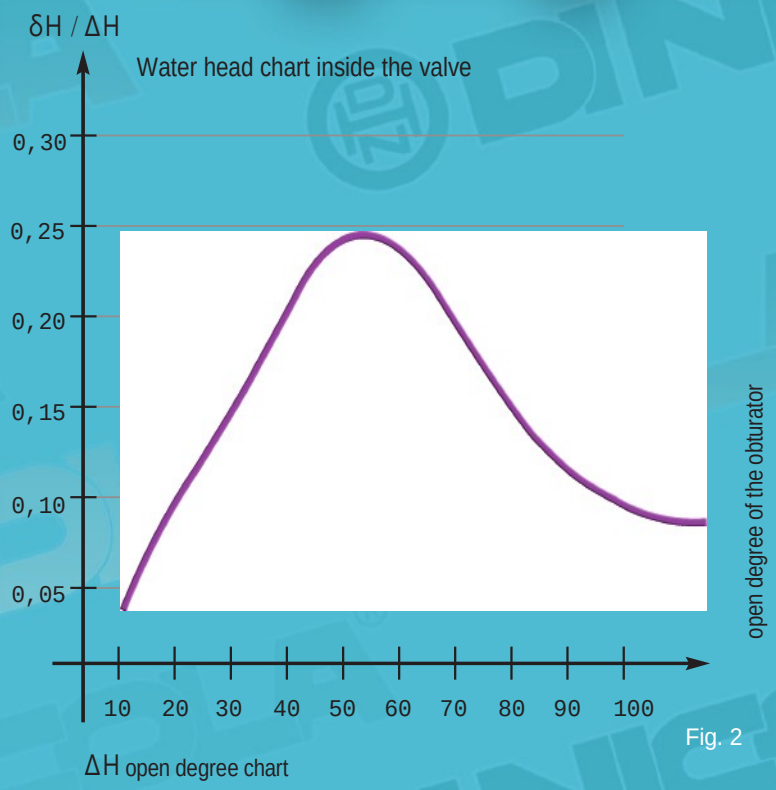

Fig. 2

CONCLUSIONS:

Analyzing the diagram (FIG.2) it is easy to see the good behaviour of the valve in relation of cavitation.
Thus, the anti-cavitation ring is not needed in standard configurations.

NEEDLE VALVE DIMENSIONING

The needle valve dimensioning is not based on the conduit diameter but on the pressure conditions in exercise and on the maximum and minimum values of the water flow.

Required data	Dimensioning example
Maximum flow required (Q - m 3/s.)	Q = 0,80 m 3/sec.
Maximum upstream pressure (Hm_{stat} - meters of water column)	Hm_{stat} = 30m.w.c.
Upstream pressure at maximum flow (Hm_{min} - m.w.c.)	Hm_{min} = 16m.w.c.
Maximum downstream pressure (Hv_{max} - m.w.c.)	Hv_{max} = 12m.w.c.

1. Determination ΔH available on the valve to deliver the flow Q:

   $\Delta H = Hm_{min} - Hv_{max}$ ⟶ $\Delta H = 16 - 12 = 4$ m.w.c.

2. Determination of the nominal pressure class (NP)

   $PN = 1,5 \times Hm_{stat}$ ⟶ $PN = 30 \times 1,5 = 45$ m.c.a. ≈ 4,5 Bar

   The nominal pressure chosen for the valve will be those immediately above the calculated value.
   The choice among the standardized ISO classes, in our case, will be NP 6.

3. Determination of the nominal diameter. The value of the diameter will be obtained by the following formula:

   $D = 0,7194\sqrt{Q\sqrt{1/\Delta H}}$ ⟶ $0,7194\sqrt{0,8\sqrt{1/4}}$ ⟶ 0,455 m.

   The chosen diameter among the standardized ISO diameters will be: ND 500
   This formula is not available when a slotted cylinder is required.

OUTLET FLOW:

The outlet flow can put on three sections:

1. Standard section.
   For normal control flow (see curve 1. head loss coefficient diagram).

2. Discharge section.
   For control flow in presence of high pressure into the pipe line. (see curve 2. head loss coefficient diagram).

3. Discharge section with very high pressure into the pipe line. In this case the inner cylinder shall have longitudinal slot.
   (see curve 3. head loss coefficient diagram).

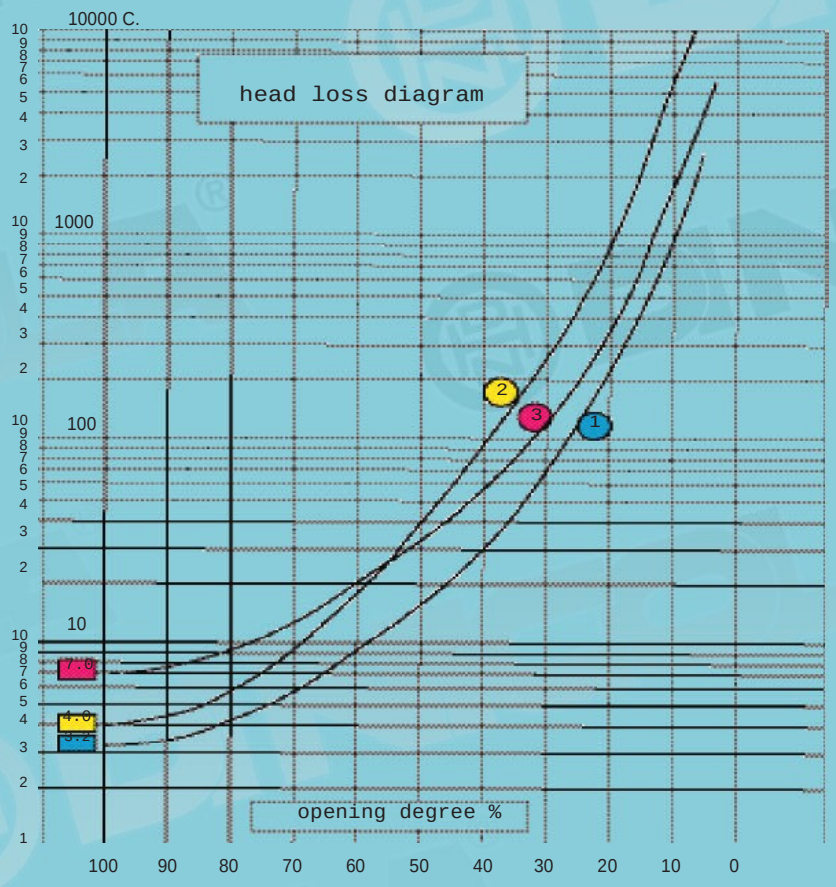

USE OF THE VALVE

This type of valve can be supplied as a solution to several flow control problems.

The followings are the most frequently encountered:

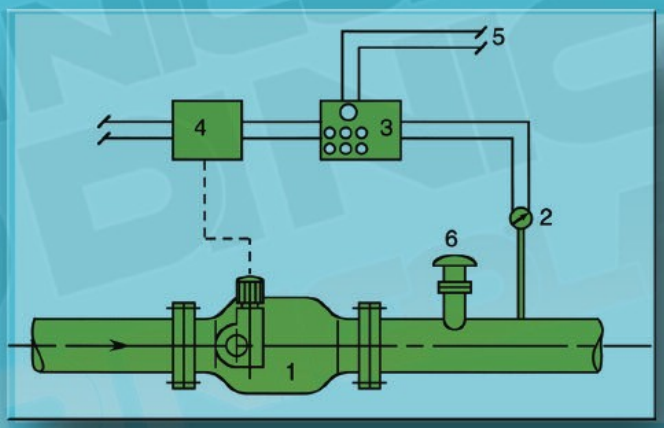

(a.) Down pressure control

Needle valve, with down stream positioned pressure gauge controlled by computer, is a very good solution to keep the pressure constant into the down stream pipe line even in presence of big changes of pressure range into the upper stream adductor pipe line.

Principle sketch-plan n 1

1.)Needle valve
2.)Pressure gauge
3.)Computer
4.)Local control electric diagram
5.)Remote control and signaling panel
6.)Relief valve

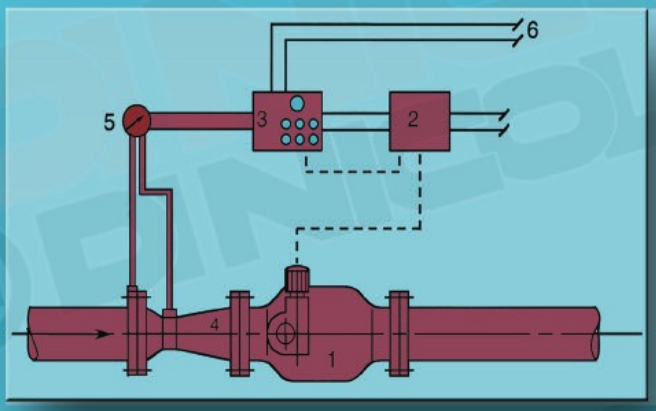

(b.) Flow control valve

On very big hydraulic plants, these valves are also used for flow control systems. In this case the Needle valve provided of flow meter is an excellent instrument for flow control crossing a fixed point of a complicate hydraulic circuit. it is also possible to program a water delivery according to a prefixed law that can be changed during the time, as required in mode rn irrigation plants.

Principle sketch-plan n 2

1.)Needle valve
2.)Valve control
3.)Computer
4.)Flow meter
5.)Flow indicator
6.)Remote control

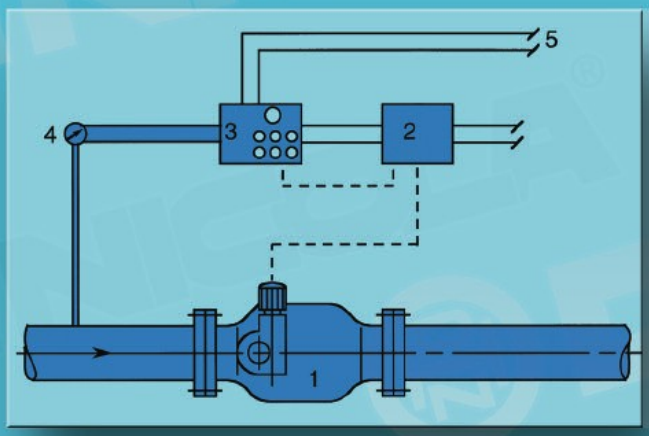

(c.) Upper stream pressure control

Needle valve with an upper stream pressure gauge controlled by a computer is an effective system to control the piezometric energy of the upper pipe line. This system is normally used on big hydraulic circuit as for acqueduct and irrigation plants.

Principle sketch-plan n 3

1.)Needle valve
2.)Valve control
3.)Computer
4.)Pressure gauge
5.)Remote control

NOTES ON INSTALLATION

- Di Nicola needle valve can be installed vertically, remembering to follow the direction of the arrow shown on them
- It is possible to install Di Nicola needle valves of dimensions smaller than conduit diameter as their design is studied in base at the flow speed. It is recommended to use a Venturi pipe upstream and downstream of the valve.
- In case a dismantling joint is used in conjuction with the valve, it is suggested to install it upstream of the valve.

DI NICOLA needle valves can be supplied with a wide range of accessories:

* ANTICAVITATION RING	* EXTENSION SPINDLES	* MECHANICAL AND GRAVITY POWERING CONTROL
* SLOTTED CYLINDER	* GSM OPENING DEGREE CONTROL	* OLEODYNAMIC ACTUATION
* EXTENSION PILLAR	* SOLAR PANNEL POWER CONTROL	* PNEUMATIC ACTUATION

DI NICOLA needle valves can be used in several applications:

* Shut-off valves in condition of high exercise pressure and high flow speed
* Anti water-hammer control valve
* Pressure regulating valve
* Pressure relief valve
* Security valve
* Bottom outlet for dams
* Tank level control system

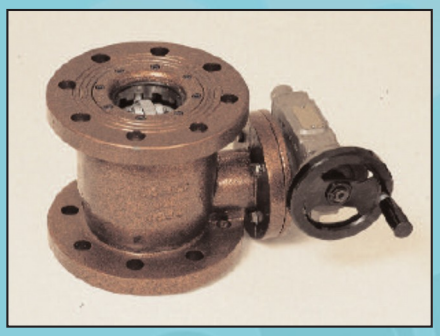

Why to choose a "DI NICOLA Needle Valve"

1) The dimensioning is based on the exercise conditions;
2) The use of anti cavitation devices is rarely required;
3) Self-lubrificating bushing are used to sustain the stem;
4) Sealing by O-ring realized only in position "closed";
5) DI NICOLA needle valve is certified by a third party;
6) Di Nicola builds and installs valves since 1981;
7) The costs are lower when using a valve with dimensions inferior to the conduit diameter;
8) Reduced head losses;
9) Increased security even in condition of heavy load;
10) High durability of the O-ring and easy upkeep of the valve;
11) Certified guarantee of performance;
12) Trustfulness supported by a very long list of references;

CONSORZIO DI BONIFICA DELLA CAPITANATA FOGGIA
SPINDLE VALVE ND 1200 ELECTRICALLY OPERATED

DIGA DI ARMINOU (CYPRUS) NEEDLE VALVE ND 1400 ELECTRICALLY OPERATED

"CONSORZIO DI BONIFICA DI NARDO" LECCE/ NEEDLE VALVE ND 1200 WITH HYDRAULIC ACTUATOR

TOLDE s.r.l.
Industrial & Oilfield Supply since 1977